ELECTRICAL, ECU - Z26S4D92AN/AH/BN/BH (C750597)

2026 RZR - RZR PRO S4 ULTIMATE (R01) - Z26S4D92AN/AH/BN/BH

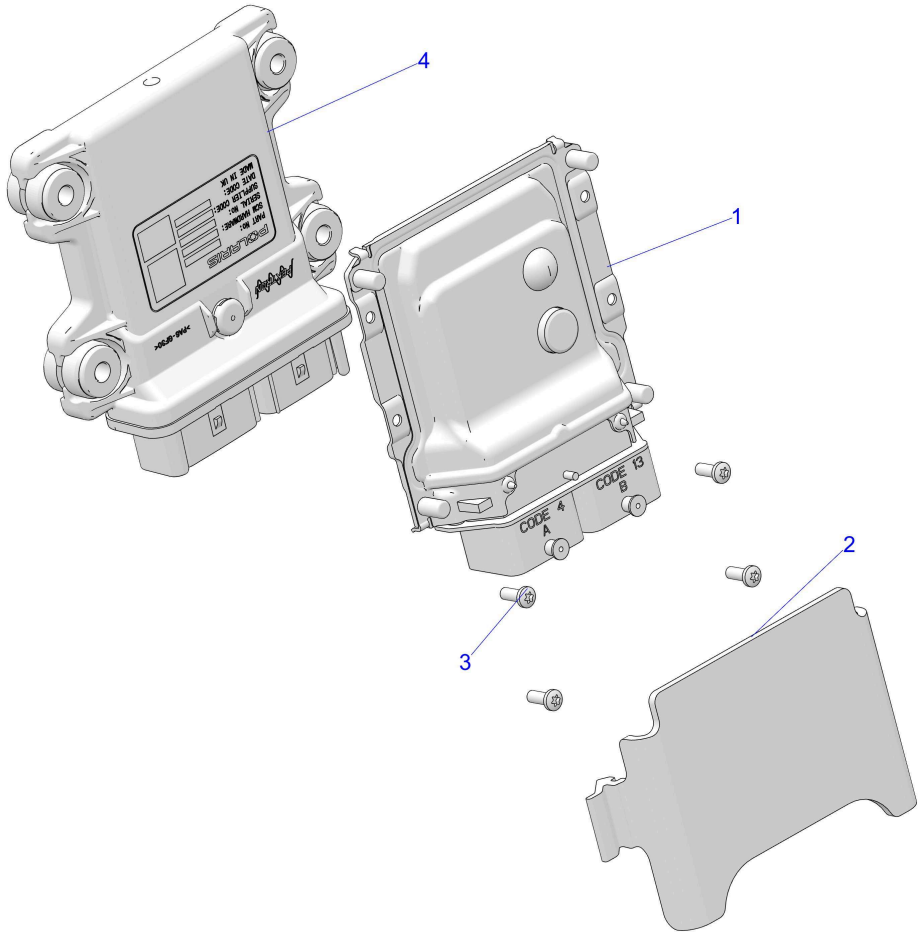

© 2024 Polaris Industries Inc. C750597

Reference #	*Part#*	*Description*	*Quantity*
1	4015694	ECM-NO START,ME17,WB CJ125 [DEALER INSTALL REQUIRED]	1
2	5438786	COVER, ECM	1
3	7519091	SCR-#10X1/2-HI/LO-PN-T25, TRX-M	4
4	4082891	SCM-PROGRAMMED,PRO S,MP	1

Copyright 1996-2026 Polaris Industries U.S.A All rights reserved.